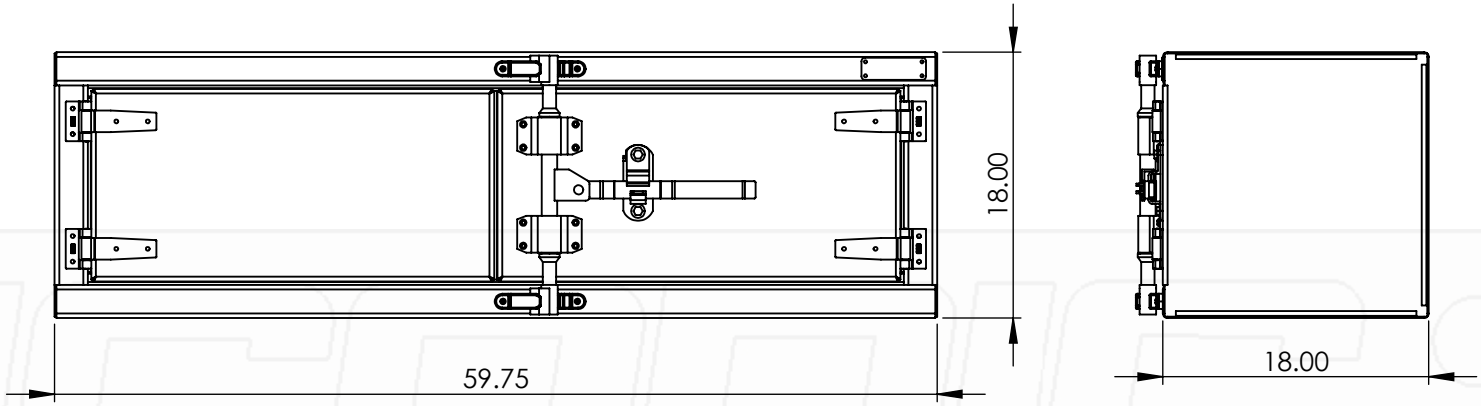

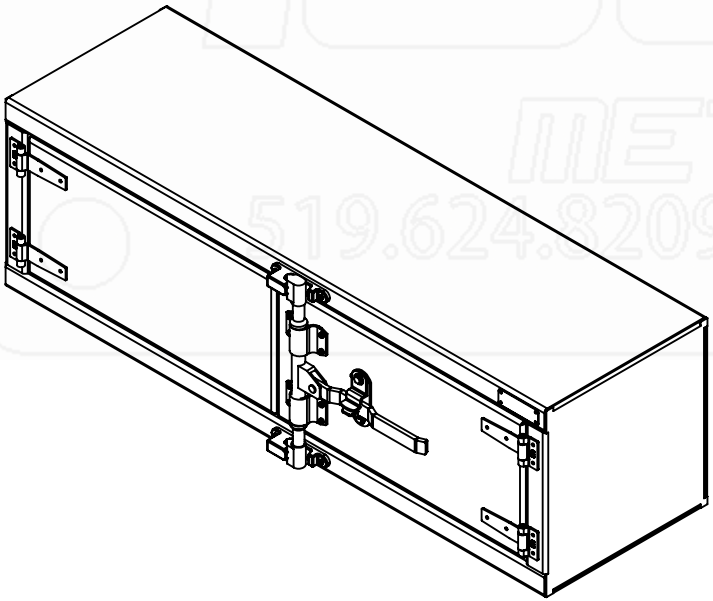

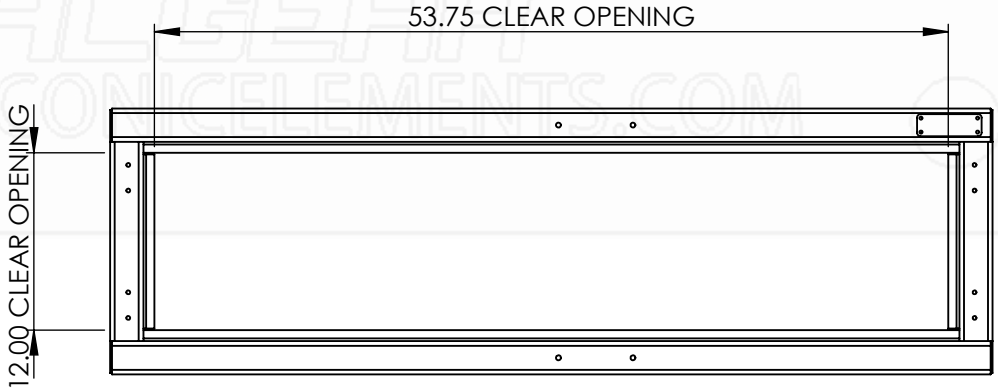

ICONIC METAL GEAR
519.624.8209 | ICONICELEMENTS.COM

Part No.:	MATERIAL: 5052 (Alum)	THICKNESS: 0.125	FINISH: Smooth	DWG. NO.: 3113-0-00-C	
1013	Approx. Weight: 75.36 lbs	**ICONIC ELEMENTS (ICONIC METALGEAR)**	TITLE:	REV:	SHEET:
	Surf. Area: 79.78 sq. ft.	**PROPRIETARY AND CONFIDENTIAL** NO PART OF THIS DOCUMENT MAY BE REPRODUCED, STORED IN A RETRIEVAL SYSTEM, OR TRANSMITTED IN ANY FORM, WITHOUT THE WRITTEN PERMISSION OF Iconic Elements Inc. (ICONIC METALGEAR)	60 x 18 x 18 Camlock	C	1 OF 1

5 4 3 2 1

D C B A